Mysterious Waves Meet St. Mary's

By United Press International

It's fish or cut bait this week for Pepperdine, the mystery basketball team of the Pacific Coast.

The Waves last year piled up a 20-7 record, won the West Coast Athletic Conference and almost defeated Oregon State in the NCAA regionals before losing 69-67. They achieved all this without a man in the lineup over 6' 5" and one of last year's most memorable sights was the 6-foot-5 Bob Warlick jumping against 7-foot Mel Counts in that Pepperdine-Oregon State tussle.

With just about every starter back this year, however, the Waves are going nowhere. Pepperdine is 9-7 on the season and 0-2 in league play.

In a trio of Bay Area basketball battles, the Waves meet St. Mary's (2-0) tonight, San Jose State (2-2) Friday and USF (4-0) Saturday.

Tonight's game will pit the WCAC's two finest players with the outstanding playmaker and scorer Warlick against Steve Gray of the Gaels, one of the deadliest scorers around.

In more WCAC action tonight, Loyola (0-4) is at Pacific (0-3) in a battle of have nots.

In action Tuesday night, Gonzaga built up a 40-15 halftime lead at the half and coasted in 80-40 over Eastern Washington. Substitute John Rickman wound up high scorer with 16.

Chico tamed Humboldt State 63-49 in Far West Conference action behind Jerry Miller's 19 points. Chico now has a 4-1 record and the Far West Conference title appears to be a battle among the Wildcats, San Francisco State (4-0) and Nevada (3-1). Chico hosts San Francisco State Saturday.

Seven foot 1 Doug Willsie hit 16 as Occidental crushed Cal Tech 90-32 in Southern California Intercollegiate Athletic Conference play. The one-sided win gave the Tigers a 4-1 loop record. Whittier leads the league with a 5-0 mark. The Poets won an 85-63 decision over Pasadena in non-conference action Tuesday night.

Roland Skelton hit 25 points and grabbed 26 rebounds as Westmont ripped Cal Lutheran 87-61.

Other scores: Los Angeles Pacific 76 Southern California College 53, Upland 76 Long Beach Pacific 65.

West Virginia, Duke Near Titles

By United Press International

West Virginia and Duke, those perennial southern basketball powers, are ready to tighten the bolts again on two more conference titles.

The Mountaineers all but assured themselves another first-place finish in the Southern Conference by rallying from a 10-point deficit to overcome Virginia Tech, 79-76, at Blacksburg, Va., Tuesday night. West Virginia couldn't go ahead for good until a jump shot by Jim McCormick gave it a 77-76 edge with just 36 seconds to play.

It will take just one more victory in three remaining league games to clinch the top spot for the Mountaineers. However, they'll still have to compete in a conference tournament at the end of the season to decide the southern representative in the NCAA championship.

Duke, ranked No. 3 in the nation, faces its big test Wednesday when it travels to Winston-Salem, N.C., and a crucial meeting with Wake Forest. Duke is currently on top of the Atlantic Coast Conference standings with an 8-0 record, but the Deacons are close behind at 8-1.

As in the Southern Conference, the ACC sponsors a post-season tourney to select the NCAA representative.

In another important league clash Tuesday night, Texas took a stronger grip on first place in the Southwest Conference by beating Texas A&M, 70-59. The Longhorns are now 6-0 while Texas A&M, which had been in a three-way tie for second place, fell back with a 3-3 mark.

NOT WAVING TO FANS — That's no wave to friends in the fourth row by Golden Glove aspirant Gary Tachell, Gary, competing in the 135-pound open division, is on his way to the canvas and a first round TKO administered by opponent Victor Vella in Chicago Tuesday night. — UPI Telephoto

Seals Can Close Lead Gap On Portland Bucks Tonight

By United Press International

The San Francisco Seals, who trailed Portland by 15 points less than four weeks ago, can close the gap to one point if they can dump the Bucks in a big Western Hockey League tussle at Portland tonight.

The rampaging San Franciscans played their 12th straight without a loss when they somehow pulled out a 5-4 overtime win at Vancouver Tuesday night.

The Standings Jan. 13 showed Portland ahead of Los Angeles and San Francisco by 15 points apiece. San Francisco's record stood at 19-16-0.

That 16 loss figure was unchanged today as the Seals boast a 30-16-1 mark. Portland is 31-14-2.

The Seals seemed doomed Tuesday night as Vancouver moved out in front 4-3 with seven minutes to go. But Orland Kurtenbach blinked the red light at 17:47 and then veteran Len Haley hit the clincher at 1:41 of the extra stanza in a three-way power play which saw Ray Cyr and Al Nicholson get assists.

The Seals have not only been good during their hot streak, they have been lucky.

For instance, they tried to trade Nicholson to Calgary Jan. 22, but he refused to go. Coach Bud Poile angrily kept him because his team was "too short now to suspend Nicholson."

Since then, Nicholson has hit seven goals and three assists.

Another bit of Seal luck occurred Tuesday night when Vancouver's Al Lebrun tripped in the second period and managed to shove the puck into his own net.

In Tuesday night's only other WHL action, Calgary broke an eight-game losing streak with a 9-5 romp over Los Angeles.

Veteran winger Gord Vejprava hit his second hat trick of the campaign to pace the Stampeders.

Seattle is at Spokane and Los Angeles at Edmonton tonight.

WHL Standings

By United Press International

Southern Division

	W	L	T	Pts	GF	GA
Portland	31	14	2	64	186	123
San Francisco	30	16	1	61	202	147
Los Angeles	25	17	2	52	156	136
Spokane	20	22	1	41	138	142

Northern Division

	W	L	T	Pts	GF	GA
Seattle	24	22	1	49	165	164
Vancouver	20	20	3	43	142	143
Edmonton	16	35	1	33	154	240
Calgary	14	34	1	29	134	200

Tuesday's Results

S.F. 5 Vncver 4 (overtime)

Calgary 9 Los Angeles 5

Wednesday's Schedule

San Francisco at Portland

Los Angeles at Edmonton

Seattle at Spokane

Yanks Happy With Inking Of Three Relief Pitchers

By United Press International

It's a rare day when the New York Yankees are satisfied just because they signed three pitchers who won a total of 14 games the previous season.

And yet general manager Roy Hamey and manager Ralph Houk feel that way with the signing of pitchers Luis Arroyo, Hector (Skinny) Brown and Roland Sheldon.

Arroyo posted only a 1-3 record in 1962 but the Puerto Rican relief ace could be a vital force this year if he comes anywhere near his 1961 form when he had a 15-5 record.

Brown, acquired from the Baltimore Orioles last Sept. 7, had a 6-7 mark last season but he was 12-5 in 1960 and, like Arroyo, could be a key reliever.

Sheldon, who won 11 games in his rookie 1961 season, slipped to 7-8 last season. However, he still is regarded as a potential 15- to 20-game winner by the Yankee high command.

The Yankees brought their satisfied list to 16 with the signing of first-baseman Mike Hegan, son of former Cleveland catcher Jim Hegan, who hit .306 for the Yankees' Fort Lauderdale farm club in 1962.

The New York Mets announced the signing of veteran first-baseman Gil Hodges, who appeared in only 54 games last season but is regarded as a potential 75- to 100-game player for the forlorn New York squad.

Catcher Doug Camilli and rookies Nate Oliver, Dick Tracewski, Dick Calmus and Dick Scott signed with the Los Angeles Dodgers while catcher Bob Oldis, outfielder Alex Johnson and pitcher Bill Wilson agreed to terms with the Philadelphia Phillies.

Local Team Leads Roller Hockey Play

Something new has been added to the already full sports scene around Klamath Falls.

The Klamath Falls Roller Hockey team is leading a six-team league with a 7-1 record. The newest team in the league, the KF team, has the second leading scorer, also, in D. Johnson with nine goals.

The Klamath team stopped Roseburg, 6-0, and handed Longview, Wash., its first defeat in two years, 3-2, last week. The other teams competing are Salem, Portland, Grants Pass and Roseburg.

All this week's games are to be played at Longview. Roseburg meets Salem, Longview takes on Portland and Grants Pass and Klamath Falls tangle. The second group of games will have Salem and Klamath mixing, Longview against Roseburg and Portland against Grants Pass. The games were played at Grants Pass last week.

Doug Koehler scored six goals in the two games last week. This league, called the Oregon State Roller Hockey League, plays only once a month. The next meet, with two games for each team, is slated for Longview, Wash., March 3.

LEAGUE STANDINGS

TEAM	W	L	T	P	GOALS for	against
Klamath Falls	7	1	0	14	35	11
Longview	7	1	0	14	27	17
Grants Pass	4	4	0	8	13	18
Salem	2	5	0	4	24	36
Roseburg	2	5	0	4	12	23
Portland (Oaks)	1	7	0	2	10	38

GRANTS PASS SCORES FEB. 3

Salem 1 Portland 2

Klamath Falls 6 Roseburg 0

Longview 4 Grants Pass 2

Portland 1 Roseburg 0

Grants Pass 2 Salem 1

Klamath Falls 2 Longview 2

Gun Club Holds Shoot

The Klamath Gun Club held its weekly shoot Sunday despite slightly damp weather. The attendance was good, including a few visitors from the Sprague River Gun Club.

The shooters all shot their 50 rounds practice from the 16-yard line, then they began on the handicap trophy shoots.

High scorer for the 50 practice rounds at 16 yards was Bill Davis with a perfect score of 50, followed by E. H. Cahoon, Paul Bellm Sr. and Joe Coburn, all tied with 49.

High scorer for the handicap event was E. H. Cahoon with a score of 48 out of 50 birds, giving him a total for the day of 97.

After the handicap shoot, the men enjoyed shooting two backscrap for steaks. Winners in the first round were Rod Smith and E. H. Cahoon. Winners of the second round were Joe Coburn and Merle Hanscom. After shooting the backers-up, some of the shooters tried their skill with the continental trap and John Lichtenstern finished on top with a perfect 25 birds, followed by Paul Bellm Jr. with 23.

Manny Elias Defeats Corona

BAKERSFIELD, Calif. (UPI)—Manny Elias of Phoenix, Ariz., pounded out a unanimous decision Tuesday night over Rudy Corona of Hermosillo, Mexico, to retain his North American Bantamweight Championship.

Elias, 118, hammered away at a cut over Corona's left eye which he opened in the fourth round.

Baseball Men Readying For Trip To Camp With Mixed Emotions

By OSCAR FRALEY

STUART, Fla. (UPI)—The men whose business is baseball are getting ready today to head south for spring training and in every camp they will run the gamut of human emotions.

There will be veterans hoping to hang on for one more year and rookies brightly optimistic of at last hitting it handsomely in the big time of the majors. Sore-armed pitchers will work and wonder but as it gets under way, at least, hope will burn brightly in all of them.

Yet it is one of the most bitter periods of the year for a man who still feels he should be among them but long ago gave up his dreams of diamond greatness.

"I should never have let them operate on the arm," he grated bitterly while almost automatically polishing the mahogany of the bar behind which he presides. "I might still be up there."

His name is Karl Spooner and the odds are that you still remember him when he was a fledgling in the chain of the now Los Angeles Dodgers.

Spooner's future glittered with promise a mere eight years ago. The husky kid from Oriskany Falls, N.Y., could throw the ball through a brick wall and he was tabbed as sure-fire major league timber even in his first season with Hornell of the Pony League in 1951.

They moved him around rapidly, giving him all the experience a youngster needs to earn his way into the majors. In 1952 he started with Miami and shuttled then to Newport News and Greenwood, Miss.

By the time he was 20, Spooner was with Elmira and Pueblo and the following year, 1954, they had him on the threshold of the big leagues at Fort Worth. Before the end of the season he was up with the Dodgers because the brass knew that no longer could they keep him down on the farm.

It was no mistake, that move, as Spooner demonstrated immediately. For the chubby-cheeked young man pitched shutouts in his first two games and set a record with 27 strikeouts in two consecutive games, fanning 15 in a game against the Giants and coming right back to strike out 12 against the Pittsburgh Pirates.

"It was great knowing you were set with the big club in the spring of 1955," he reminisced. "But I cut loose before I was really ready, too enthusiastic, maybe, and I threw my arm out."

Spooner still had a 10-6 mark that season but the ominous handwriting was on the wall. He couldn't throw that spring of 1956 at Vero Beach, laid off a while and then gave it one last hungry try at St. Paul.

"They operated on the arm but it just never came back," he said stoically, the hurt showing only in his eyes. "If they hadn't operated, it might eventually have come around. But now it's all over."

Spooner at 31 still looks fit enough for action. But a sore-armed pitcher who didn't last long enough to make his score, has to work to keep four daughters. Bartending in this tiny hamlet mid-way up the East Coast of Florida is his answer.

But his smile becomes a bit strained and fixed at this time of the year. Except for the fates, he, too, would be getting ready to join the locker room reunions. Even the veterans hoping to hang on for another year have brighter hopes than Spooner. He has none.

BOWLING SCORES

NIGHT CRAWLERS LEAGUE

	W	L
Klamath Hardwoods	42½	27½
Shortys Flying A	40½	29½
Crispy Creme Donuts	39½	30½
Frantz Oil Filters	34½	43½
Halls Signal Service	31	49
Elmers Texaco	30½	49½
Rays Harley Davidson Sales	30	50
Weyerhaeuser	29½	50½
Johnnys Flying A	27½	52½
Cash & Save Oil Co.	22½	57½

Results: Halls Signal Service 4, Elmers Texaco 1; Rays Harley Davidson 4, Weyerhaeuser 1; Shortys Flying A 3, Frantz Oil Filters 0; Johnnys Flying A 4, Cash & Save Oil Co. 1; Klamath Hardwoods 3, Crispy Creme Donuts 2.

High team game, Cash & Save Oil Co. 833; high team series, Johnnys Flying A 2376; high ind. game, Andy Anderson 236; high ind. series, Bill Hanan 777.

COFFEE CUP LEAGUE

	W	L
Overhead Door	36	24
Pohlmans Logging	32½	27½
Tower Furniture	30½	29½
Bings Satellite	44	34
Big Y Market	42½	34½
Clydes Towing	43	37
Klamath Auto Wreckers	42	38
Jones Office Supply	41	39
Mohler Bros.	40	40
Fashion Cleaners	38	42
Bowden Music	38	42
So. Ore. Aviation	34½	45½
Driscoll & Padgett	32½	47½
Johnnys Flying A	32½	47½
Liens Store	30	50
Suburban Finance	26	54

Feb. 5 results: Sub. Finance 4, Driscoll & Padgett 0; So. Ore. Aviation 4, Bings 0; Pohlmans Logging 4, Bowden Music 0; Big Y (Jet) 4, Jones Ofc. 0; Fashion Cleaners 3, Johnnys Flying A 1; Klamath Auto Wreckers 3, Overhead Door 1; Tower Furniture 3, Clydes Towing 1; Mohler Bros. 3, Liens Store 2.

High team game, Mohler Bros. 799; high team series, Tower Furniture 2166; high ind. game, Virginia Morey 234; high ind. series, June Vanderhoff 574.

NITE OWL LEAGUE

	W	L
Mustangs	47½	33½
A & Ds	47½	33½
Sweepers	41	35
Panhandlers	40	36
Hi-Zums	38½	37½
Cottonpickers	38	38
The Blind Four	33½	38½
a-Dynamics	29	43

Feb. 5 results: Sweepers 2, Panhandlers 2; The Blind Four 3, Cottonpickers 1; Mustangs 4, a-Dynamics 0; Hi-Zums 2, A & Ds 2.

High team game, Hi-Zums 882; high team series, Panhandlers 2511; high ind. game (men), Sonny Heim 232; high ind. series (men), Leroy Brown 586; high ind. game (women), Beulah Alberg 155; high ind. series (women), Mary Woodley 470.

HOLIDAY JUNIOR LEAGUE

	W	L
Hypophrenics	28	18
Wood Hogs	26	20
Witch Doctors	26	20
DeMolay No. 4	23½	23½
Pumpkins 1	23½	20½
Figureless Five	22	24
No Talent	21	21
Top Dogs	19	27

Results, DeMolay No. 4 4, Top Dogs 0; No Talent 4, Figureless Five 0; Witch Doctors 3, Wood Hogs 1; Hypophrenics 3, Pumpkins 5 1.

High team game, Pumpkins 1 932; high team series, Hypophrenics 2709; high ind. game, Tim Post 201; high ind. series, John Tinker 512.

BOOSTER LEAGUE

	W	L
Duffs Heating	59	25
Dorris Lumber	55	34
Heaton Steel	49	35
Kimball Glass	43	41
Jacks Color Chip	40	44
Swift & Co.	39	45
Pelican Motel	39	45
Metler Brothers	38	46
Amidons	38	46
Unique Market	38	46
Klamath JC	37	47
Nelson TV	34	50

Results: Duffs Heating 3, Heaton Steel 1; Klamath JC 3, Nelson TV 1; Amidons 2, Metler Bros. 1; Swift & Co. 4, Dorris Lumber 0; Pelican Motel 3, Jacks Color Chip 1; Unique Market 3, Kimball Glass 1.

High team game, Swift & Co. 1079; high team series, Swift & Co. 3088; high ind. game, Burritt Smith 224; high ind. series, Terry Boyer 587.

JOLLY JINX LEAGUE

	W	L
Tack Room	35	25
Kl. Brick & Tile	31	29
Les Hoback	47	33
Winema Hotel	44	36
House of Shoes	42½	36½
Klamath Lumber & Box	41	37
Freemans Saddlery	41½	37½
Bobs Flying A	40	40
Clydes Market	35	45
Picketts Dairy	35	45
Big Y Market	28	52
Skyline Diesel	16	64

Results: Picketts 3, Winema 1; Kl. Brick & Tile 3, Big Y 1; Tack Room 3, House of Shoes 1; Skyline 3, Clydes 1; Kl. Lumber 3, Bobs 1; Les Hoback 3, Freemans 3.

High team game, Tack Room 891; high team series, Tack Room, Kl. Brick & Tile 2579; high ind. game, House Klinhol 233; high ind. series, Hydee Kimbel 632.

MOOSE PA'S LEAGUE

	W	L
Lucky Lanes	49½	30½
Musgrave Plumbing	47½	32½
Altamont Grocery	42	38
O'Hair's Memorial Chapel	41½	38½
CP & WW Ward	40½	39½
Pestego's Market	40	40
Harry Lanphear Insurance	39	41
Bings Satellite Room	37½	42½
"49" Club	33½	46½
Merrill Moose	31	49

Feb. 4 results: Merrill Moose 3, Bings Satellite Room 2; "49" Club 3, CP & WW Ward 2; Pestego's Market 3, Harry Lanphear Ins. 1; Musgrave Plumbing 3, Altamont Grocery 1; O'Hair's Memorial Chapel 3, Lucky Lanes 4.

High team game, Harry Lanphear Insurance 876; high team series, Lucky Lanes 2407; high ind. game, Bob Tesch 243; high ind. series, Bob Tesch 623.

First Ward, Lutheran Win

The Latter Day Saints First Ward and Hope Lutheran teams earned wins Monday night in the YMCA Church League basketball games.

The First Ward stopped Suburban Christian five, 16-7, with Dennis Gooding and Ben Kerns each hitting four points. Farnam and Woodard had two each for the losers.

Hope Lutheran trampled First Methodist, 54-9. Gary Hill doubled First Methodist total scoring with 18 points for Lutheran. Gary Durfree had nine. Randy Webb led the Methodists with four points.

Sprague River Wins 2 Games

The Sprague River Ducks continued their winning ways Tuesday night with a doubleheader win over the Chiloquin Pirates and Crescent Mohawks.

The Ducks topped the Pirates, 70-45, as DeMerle Lytle hit 24 and Don Dexter 12. Ed Case topped the Pirates with 21.

They beat the Mohawks in the second game, 79-40. Butch Crume led the winners with 21 and Lytle had 13. Vince Cumby had 12 for the losers.

DRIVE IN HERE

FOR THE BEST TIRE DEALS IN TOWN

FIRESTONE

FIRESTONE ACROSS-THE-BOARD TIRE SALE

13-INCH
14-INCH
15-INCH
16-INCH
We have your size at BARGAIN PRICES

PICK YOUR TIRE PICK YOUR PRICE
We've reduced prices on our entire line for this "across-the-board" SALE!

STORE HOURS
7 a.m. to 6 p.m.
DAILY

ALL TIRES MOUNTED
FREE
by trained tire experts!

Big Selection of
USED TIRES
Priced as Low as 4.66

Just say "Charge It" take months to pay

Every new Firestone tire carries a 15 to 36-month ROAD HAZARD GUARANTEE honored by more than 60,000 Firestone dealers and stores in all 50 states and Canada

You know what you're getting when you buy Firestone.

Every new Firestone tire is GUARANTEED
1. Against defects in workmanship and materials for the life of the original tread.
2. Against normal road hazards (except repairable punctures) encountered in everyday passenger car use for the number of months specified.
Replacements prorated on tread wear and based on list prices current at time of adjustment.

BLACKWALLS
WHITEWALLS
(New narrow design or conventional whitewalls ...you name it)

TUBELESS OR TUBE-TYPE
Nylon or Rayon
WE HAVE THEM!

Sure We Have
RETREADS
Any size WHITEWALLS
4 for only 49.49
Plus tax and 4 trade-in tires all your car

BIG SAVINGS
ON MAJOR BRAND
New Car "Take-Offs"
Low mileage used tires
Priced for FAST SALE
FIRST COME—FIRST SERVED

2-63

Enjoy the Voice of Firestone every Sunday evening on ABC-TV

WITH THIS COUPON

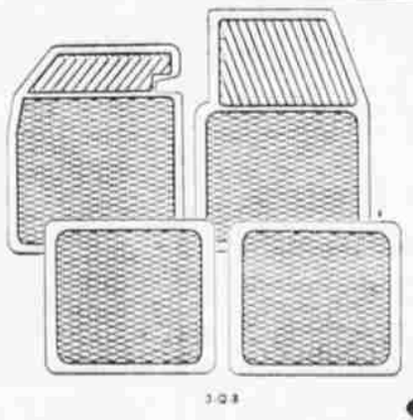

Front and Rear
Car Floor MAT Set
$1.99
Heavy-duty rubber mats in choice of colors.

Firestone
where your dollar buys MILES more
STORES
6th & Pine TU 4-8109

SEE US FOR TIRES
★ our QUALITY is unmatched!
★ our PRICES LOW!
★ EASY TERMS!
$1 DOWN
$1 A WEEK

People Read
• SPOT ADS
— you are now.

FUEL OIL
DELIVERED
7 DAYS A WEEK
Ph. TU 4-6788
7 DAYS A WEEK
Ph. TU 4-6788
Jay Hawk
PETROLEUM
2135 So. 6th
or
So. 6th and Crest

JEEP OWNERS!
We are now your headquarters for all your 4-wheel drive needs!

Authorized Parts, SALES and SERVICE For all
WILLYS "Jeep" Vehicles
Joe Fisher
677 So. 7th Ph. 4-8104

DUGAN & MEST FEBRUARY Special

GUARDIAN MAINTENANCE SERVICE!
Complete Chassis Lubrication 99c
With Each Oil Change
Your Choice of Mobil, Quaker State, Pennzoil, RPM Heavy Duty or RPM Delo Oil.
Call TU 4-3101 for Appointment or Free Pickup & Delivery
DUGAN & MEST
CHEVROLET
410 So. 6th Ph. TU 4-3101